RemKey General	Page	Date	Description

Servo Motion Technologies

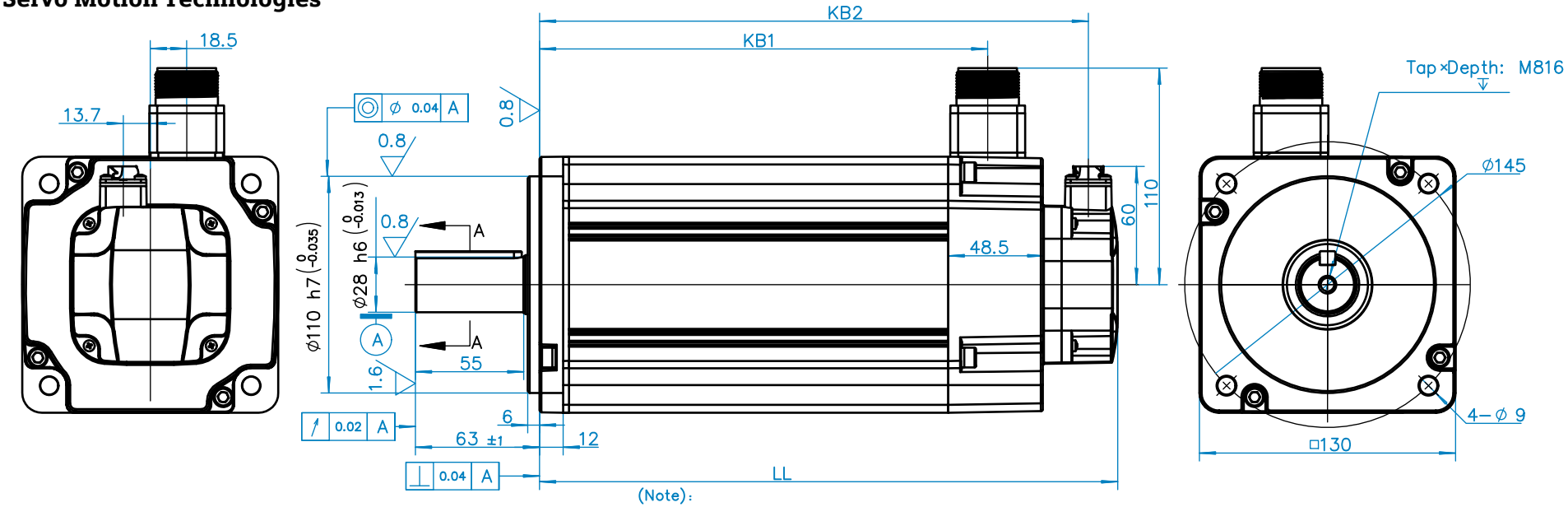

(Note):
For mortor with oil seal,oil seal material is fluorine rubber,normal operation requirements: pressure≤0.04MPa

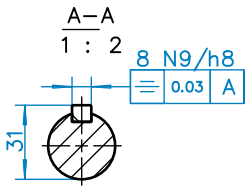

MODEL / PART NUMBER	Encoder model	Weight (Kg)	External dimensions (mm)		
			LL	KB1	KB2
EM3A-30A T/L A244	T: 17 bit absolute encoder L: 23 bit absolute encoder	12	226.5	160.5	211.5
EM3A-30D T/L A244		12	226.5	160.5	211.5
EM3A-40D T/L A244		14	253.5	187.5	238.5
EM3A-50D T/L A244		15.5	293.5	227.5	278.5

Power Cable

Connector Spec.	Pin No.	Color
U	B	Red
V	I	Blue
W	F	White
FG	C	Yellow/Green
FG	D	Yellow/Green
B1	G	Light blue
B2	H	Black

Power Cable Connector

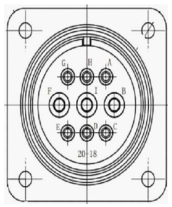

Encoder Cable

L type	Pin No.	Color
SD+	1	Blue
SD-	2	Purple
BAT+	3	Orange
BAT-	4	Brown
—	5	—
—	6	—
PG0V	7	Black
PG5V	8	White
—	9	—
FG	10	FG

Encoder Connector

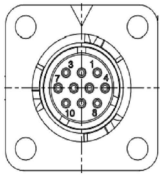

Note:If motor without holding brakes,there is no B1 and B2 signal on the Power cable connector

Motor body heat resistance class: F
A:200V / D:400V L:23-bit absolute encoder A/B: Design Order

MATERIAL:
FINISH:

TOLERANCE UNSPECIFIED	
.XXX	±0.15
.XX	±0.20
.X	±0.25
ANGLE	±0.5°

THIRD ANGLE PROJECTION

	NAME:	DATE:
DRAWN:	R.M	11/19/19
DESIGNER:	R.M	11/19/19
CHECKED:	R.M	JAN12,2025
APPROVED:	R.M	JAN12,2025

Servo Motion Technologies Inc.
www.servomotiontechnologies.com

NAME: Servo Motor
PART NO: EM3A-30 40 50 With Brake
DRAWING NO: Dr140310-23
UNIT: mm SIZE: A3 REV: 00
SCALE: 2:1 SHEET: 1 OF 1