RemKey General	Page	Date	Description

Servo Motion Technologies

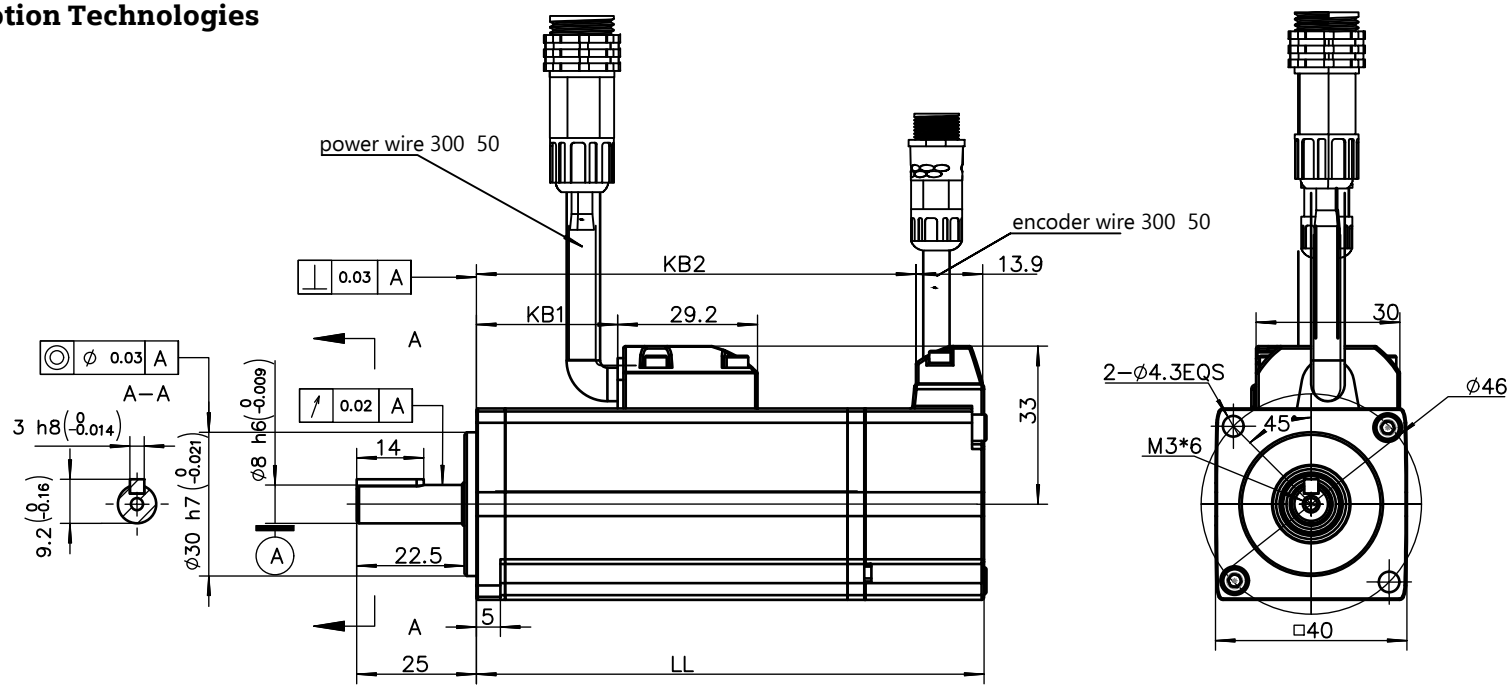

MODEL / PART NUMBER	ENCODER TYPE / Res	DIMENSIONS (mm) LL	KB1	KB2	
EM3A-A5ALA248	L:23-bit absolute encoder	96	32.8	81.8	
EM3A-01AT/FA248	T:17-bit absolute encoder F:20-bit incremental enc.	122	48.8	107.8	
EM3A-01ALA248	L:23-bit absolute encoder	112	48.8	97.8	

Power Cable

No Brake	With Brake	Pin No.	Connector Spec.
		1	U
		2	V
		3	W
		4	FG
		5	B1
		6	B2

Encoder Cable

Pin No.	F type	L type
1	S+	S+
2	S-	S-
3	/	BAT+
4	MA+	/
5	MA-	/
6	PG5V	PG5V
7	PG0V	PG0V
8	/	BAT-
9	FG	FG

MATERIAL:

FINISH:

TOLERANCE UNSPECIFIED	
.XXX	±0.15
.XX	±0.20
.X	±0.25
ANGLE	±0.5°

THIRD ANGLE PROJECTION

	NAME:	DATE:
DRAWN:	R.M	11/19/19
DESIGNER:	R.M	11/19/19
CHECKED:	R.M	JAN12,2025
APPROVED:	R.M	JAN12,2025

Servo Motion Technologies Inc.

www.servomotiontechnologies.com

NAME: Servo Motor

PART NO: EM3A-A5 01ALA TA FA248 BRK

DRAWING NO: Dr140310-23

UNIT: mm | SIZE: A3 | REV: 00

SCALE: 2:1 | SHEET: 1 OF 1